1887170
O-Juliet Full/Queen Headboard
Parts List

A.	Headboard Panel	1 pc
B.	Left Headboard Post	1 pc
C.	Right Headboard Post	1 pc
D.	Long Allen Head Bolts	4 pcs
E.	Short Allen Head Bolts	6 pcs
F.	Nuts	4 pcs
G.	Lock Washers	10 pcs
H.	Flat Washers	14 pcs
I.	Allen Head Wrench	1 pc
J.	Spanner	1 pc
K.	Optional Allen Head Screwdriver Bit	1 pc

* Please make sure that you have all the parts and hardware indicated above before you begin assembly of this item.
* Use the hardware illustrations to determine correct piece and size.
* This item should be assembled on a soft surface to prevent scratching the finish during assembly.
* Take care not to overtighten bolts if using supplied Allen Head Screwdriver Bit.

Hardware Illustrations

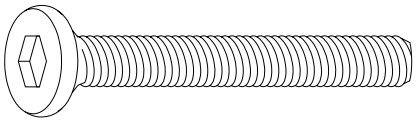

D. Long Allen Head Bolt

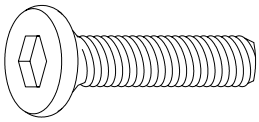

E. Short Allen Head Bolt

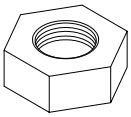

F. Nut

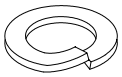

G. Lock Washer

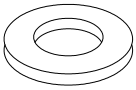

H. Flat Washer

1887170
O-Juliet Full/Queen Headboard

Assembly Instructions

Headboard can be attached to most standard bed frames (sold separately) that have a universal headboard bracket end as shown below.

1. **Attach Left & Right Headboard Posts (B, C)** Lay the Headboard Panel (A) upside down on a soft surface. Align the pre-drilled holes in the Left & Right Headboard Posts (B, C) with the pre-threaded holes in the Headboard Panel (A). Make sure the metal plates for threaded holes insert into the holes in the Left & Right Headboard Posts (B, C). Secure with Short Allen Head Bolts (E), Lock Washers (G) and Flat Washers (H) using Allen Head Tool (I or K). See illustration.
2. **Attach Headboard to Brackets** Put the headboard upright. Align the pre-drilled holes in the Left & Right Headboard Posts (B, C) with the pre-drilled holes in the bracket ends. **Note: Attach bracket ends to headboard using inside holes for full bed or outside holes for queen bed.** Headboard should sit flush to the floor once it is attached. Use the levelers underneath the headboard posts to adjust the height if necessary to ensure a proper fit. Insert Long Allen Head Bolts (D), Lock Washers (G) and Flat Washers (H) through the Left & Right Headboard Posts (B, C) into pre-drilled holes in the bracket ends. Secure with Flat Washers (H) and Nuts (F) using Spanner (J) and Allen Head Tool (I or K). See illustration.

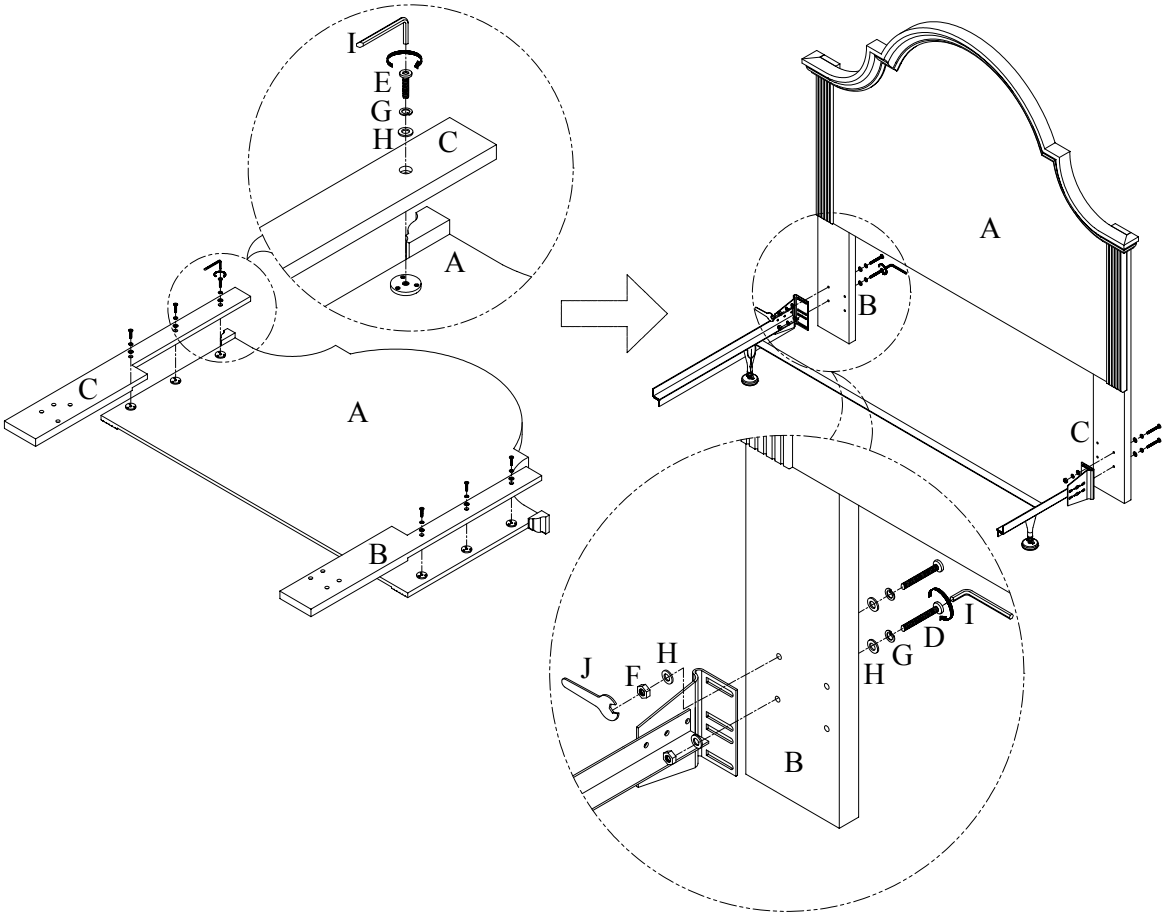

R1-2-2-05